ITEM	QTY. -041	P/N	DESCRIPTION
	X	D5291-041	RADIUS BLOCK ASSEMBLY
1	1	D5291-1	RADIUS BLOCK
2	1	MS21076-4	ANCHOR NUT
3	2	MS20426AD3-4	RIVET, CSK

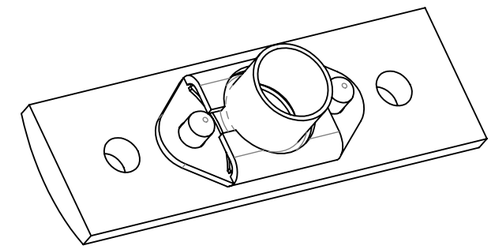

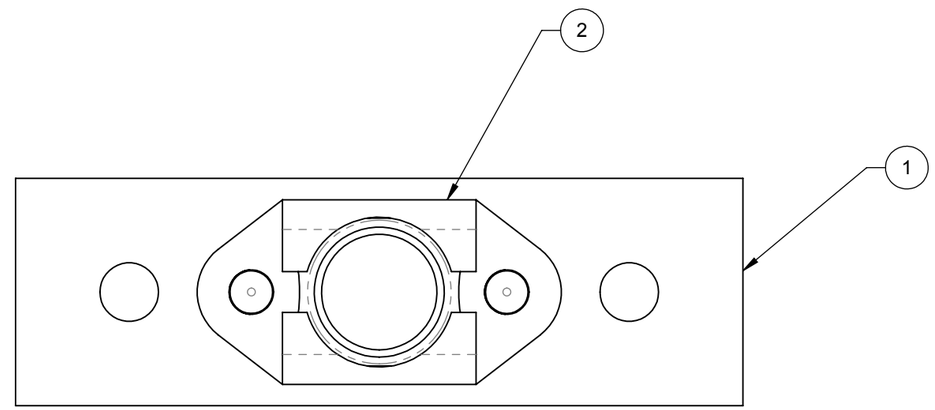

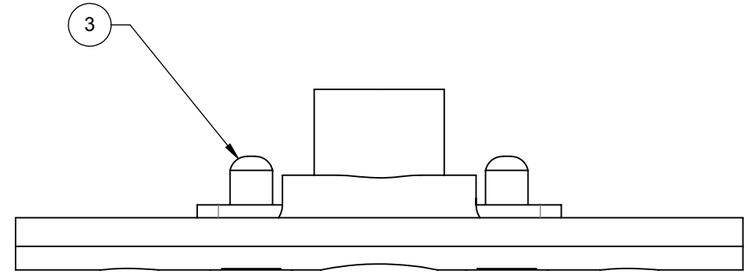

D5291-041 RADIUS BLOCK ASSEMBLY

NOTES:
1) MATERIAL: N/A
2) FINISH: N/A
3) TOLERANCES: PER DART QSI 018 UNLESS OTHERWISE NOTED
4) UNITS: INCHES UNLESS OTHERWISE NOTED
5) BREAK SHARP EDGES: 0.005 TO 0.010 MAX
6) IDENTIFICATION: IDENTIFY WITH DART P/N "D5291-041" USING FINE POINT PERMANENT INK MARKER
7) WEIGHT: 0.01 lbs

PRELIMINARY ISSUE

REV.	DESCRIPTION	BY	DATE
A	NEW ISSUE	CC	15.07.27

DESIGN	CC	DART AEROSPACE LTD HAWKESBURY, ONTARIO, CANADA	
DRAWN	CC		
CHECKED	VS	DRAWING NO.	REV. A4
MFG. APPR.	JLM	D5291	SHEET 1 OF 2
APPROVED		TITLE	SCALE
DE APPR.		RADIUS BLOCK	NTS
DATE	15.07.27		

COPYRIGHT © 2015 BY DART AEROSPACE LTD
THIS DOCUMENT IS PRIVATE AND CONFIDENTIAL AND IS SUPPLIED ON THE EXPRESS CONDITION THAT IT IS NOT TO BE USED FOR ANY PURPOSE OR COPIED OR COMMUNICATED TO ANY OTHER PERSON WITHOUT WRITTEN PERMISSION FROM DART AEROSPACE LTD.

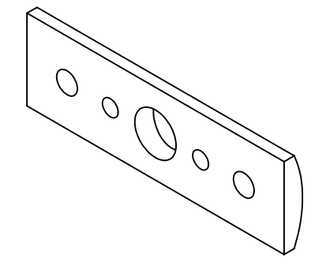

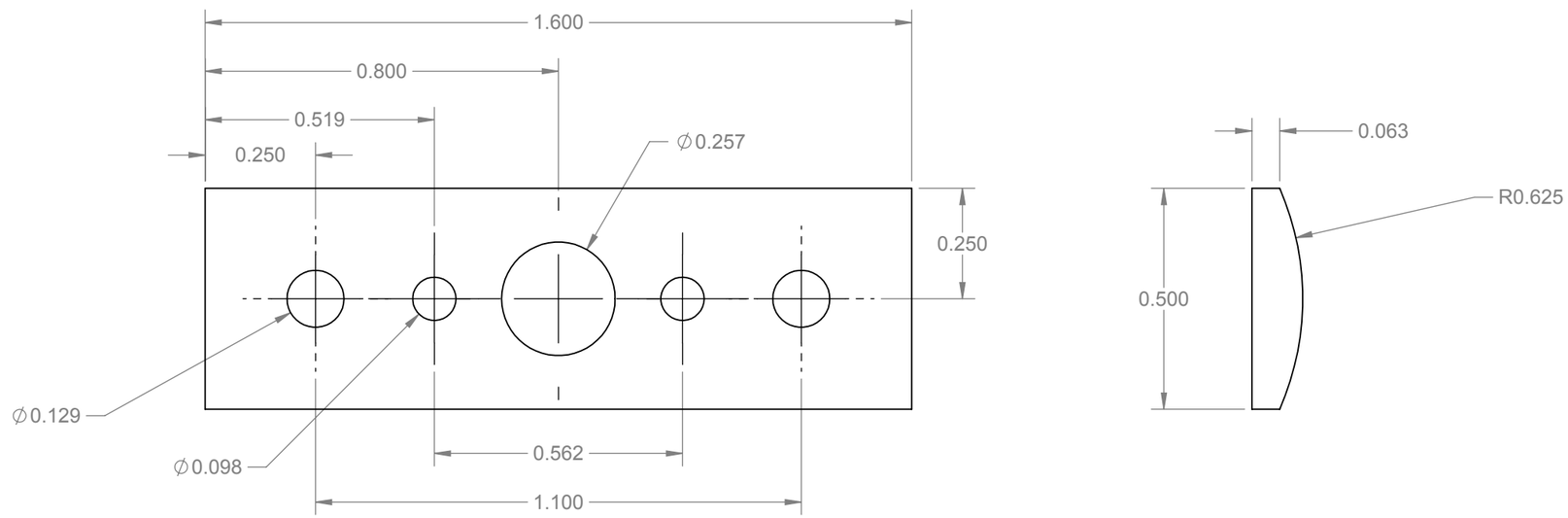

D5291-1 RADIUS BLOCK

NOTES:
1) MATERIAL: 6061-T6/T62 ALUMINIUM BAR
QQ-A-225/8 OR AMS-QQ-A-225/8 (OR AMS 4117/4128/4115/4116) OR QQ-A-200/8 OR
AMS-QQ-A-200/8 (OR AMS 4160) OR ASTM B211 OR ASTM B221
REF DART SPEC M6061T6B
2) FINISH: ALODINE PER DART QSI 005, SECTION 4.1.2
3) TOLERANCES: PER DART QSI 018 UNLESS OTHERWISE NOTED
4) UNITS: INCHES UNLESS OTHERWISE NOTED
5) BREAK SHARP EDGES: 0.005 TO 0.010 MAX
6) IDENTIFICATION: IDENTIFY WITH DART P/N "D5291-1" USING FINE POINT PERMANENT INK MARKER
7) WEIGHT: 0.01 lbs

PRELIMINARY ISSUE

DESIGN	CC	**DART AEROSPACE LTD** HAWKESBURY, ONTARIO, CANADA
DRAWN	CC	
CHECKED	VS	DRAWING NO. D5291 — REV. A4 — SHEET 2 OF 2
MFG. APPR.	JLM	
APPROVED		TITLE: RADIUS BLOCK — SCALE: NTS
DE APPR.		
DATE	15.07.27	

COPYRIGHT © 2015 BY DART AEROSPACE LTD
THIS DOCUMENT IS PRIVATE AND CONFIDENTIAL AND IS SUPPLIED ON THE EXPRESS CONDITION THAT IT IS NOT TO BE USED FOR ANY PURPOSE OR COPIED OR COMMUNICATED TO ANY OTHER PERSON WITHOUT WRITTEN PERMISSION FROM DART AEROSPACE LTD.